Lab 1: Arithmetic and logical operations

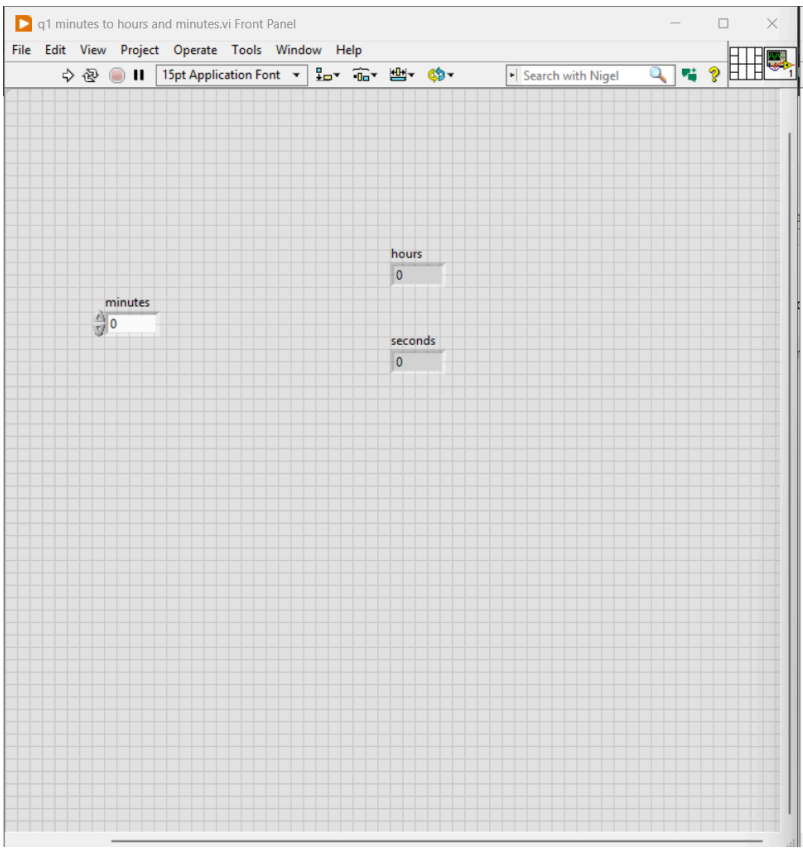

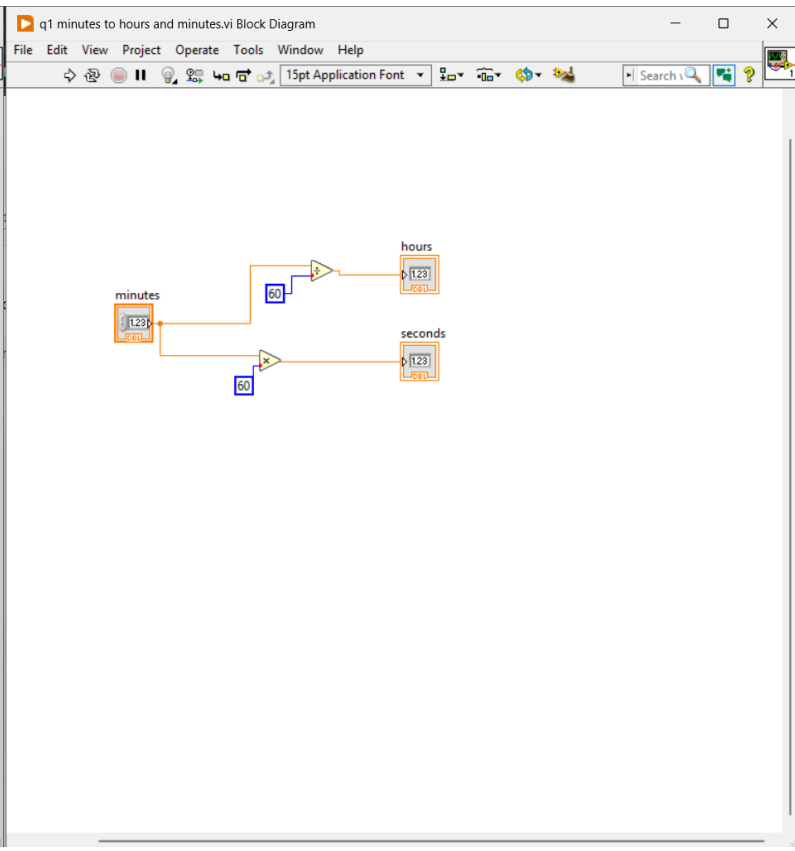

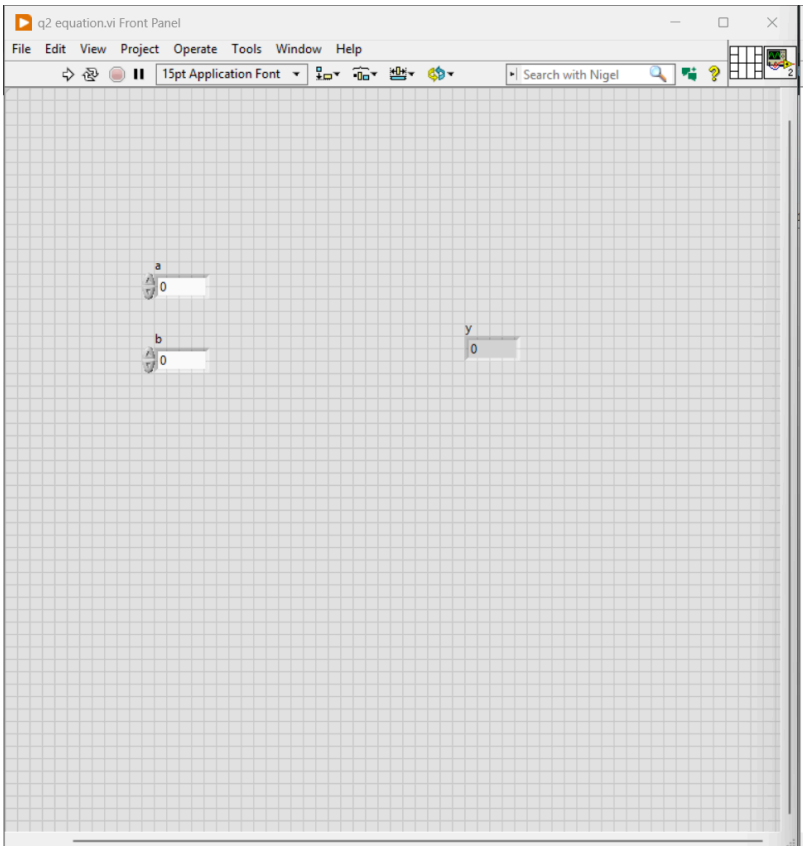

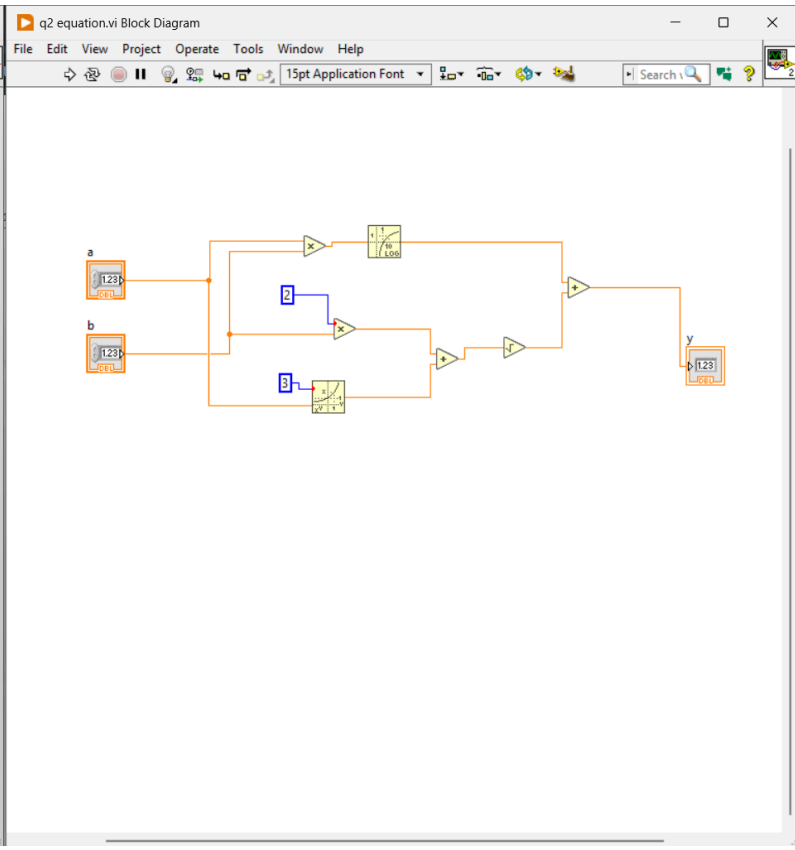

Lab 1: Arithmetic and logical operations

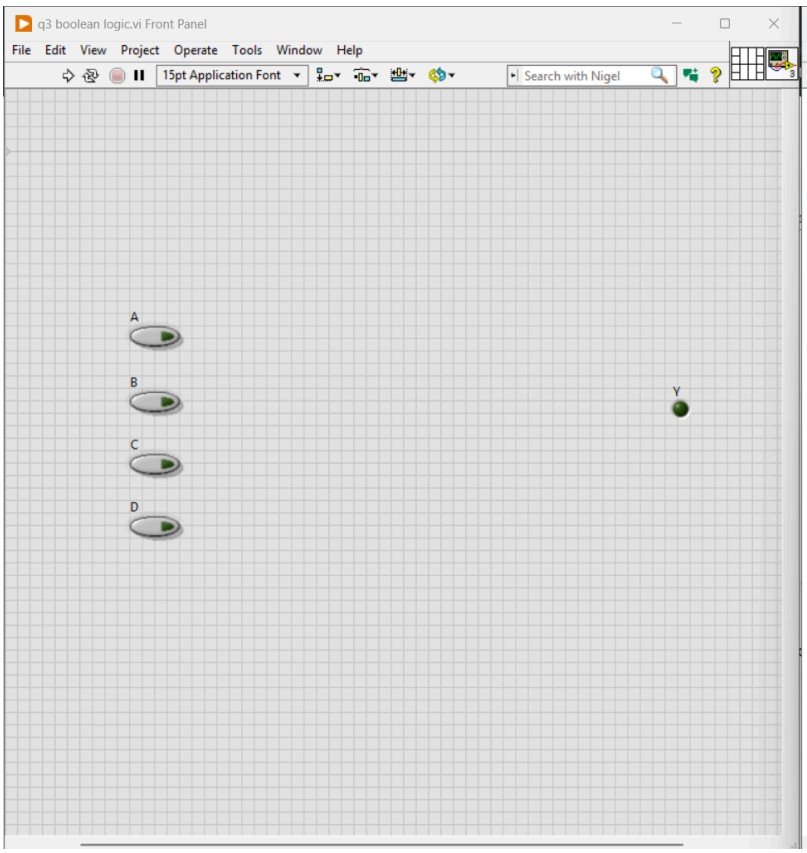

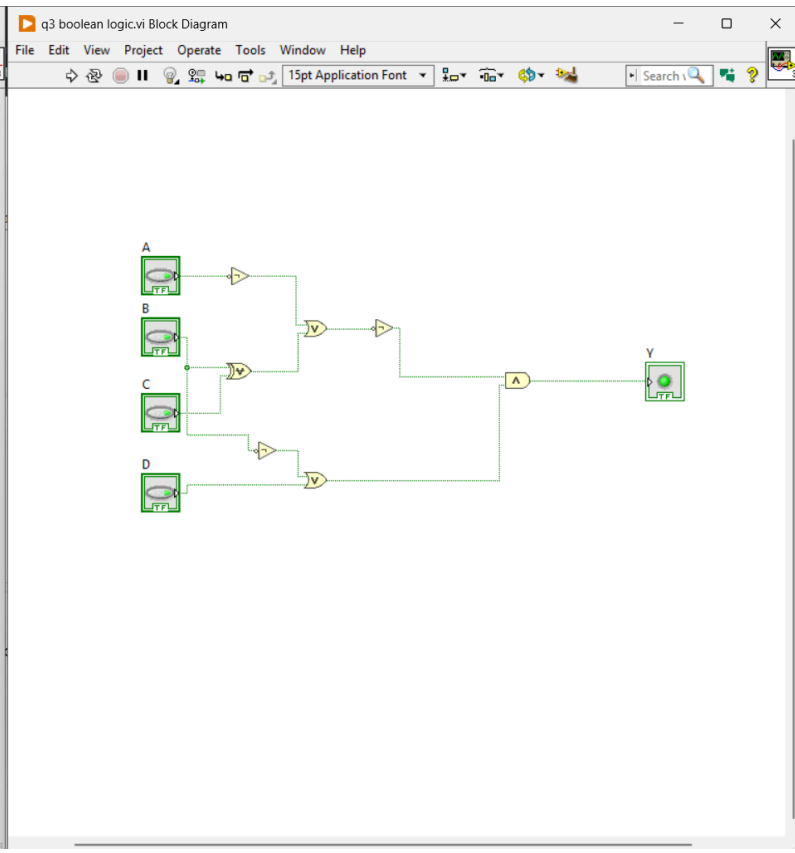

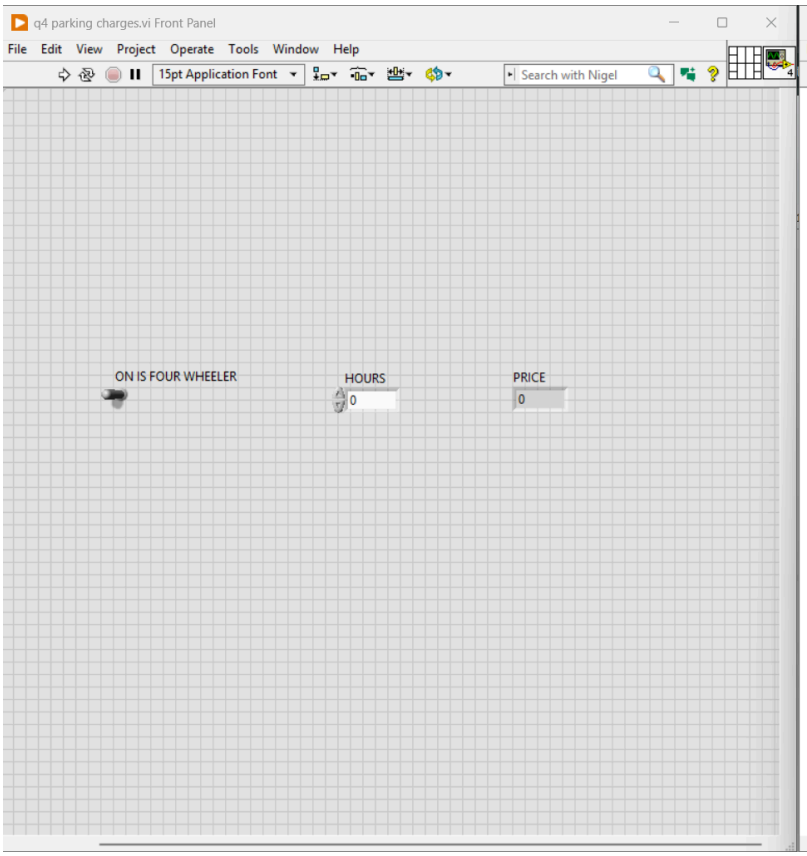

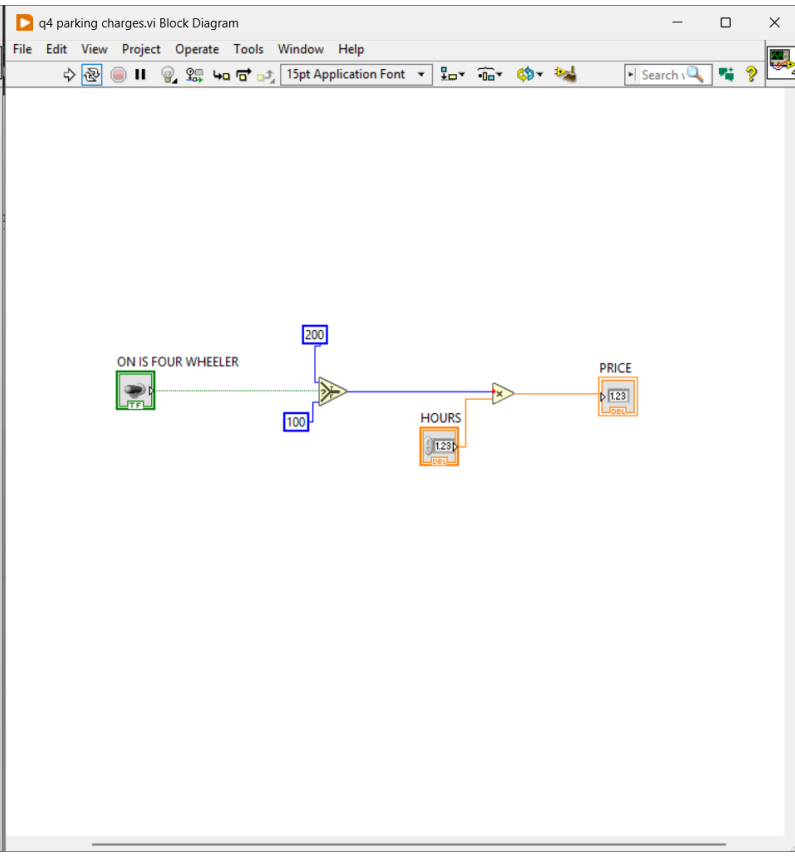
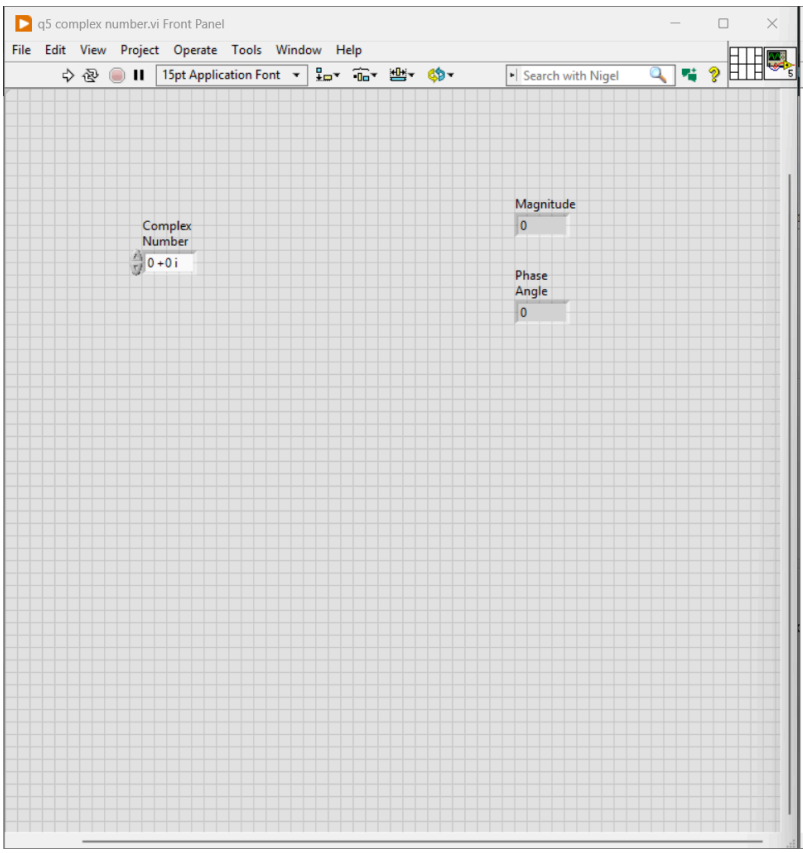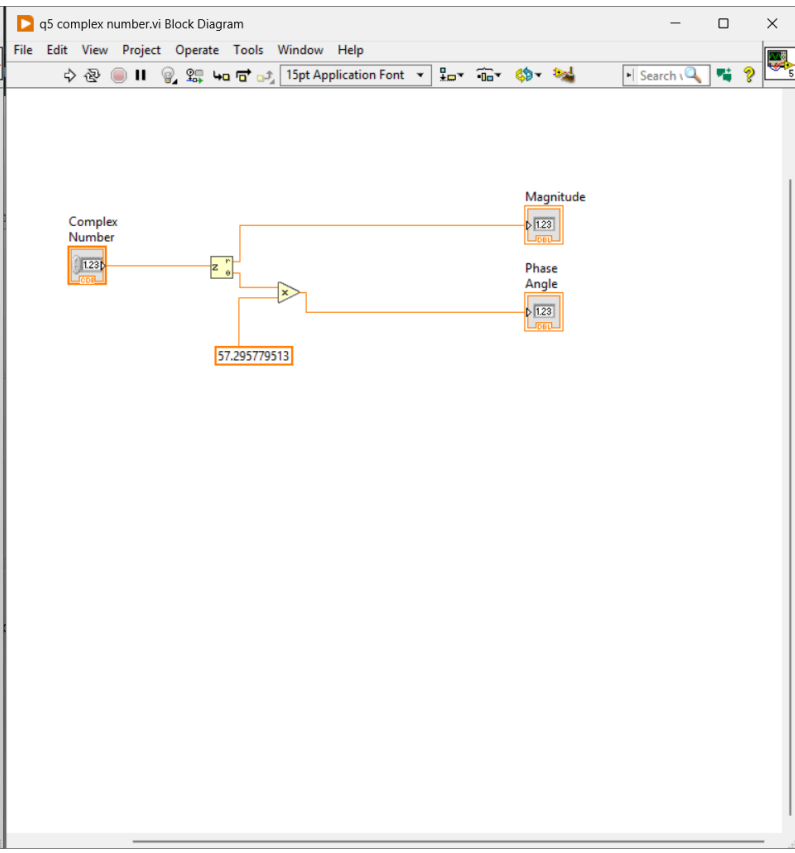
Lab 1: Arithmetic and logical operations